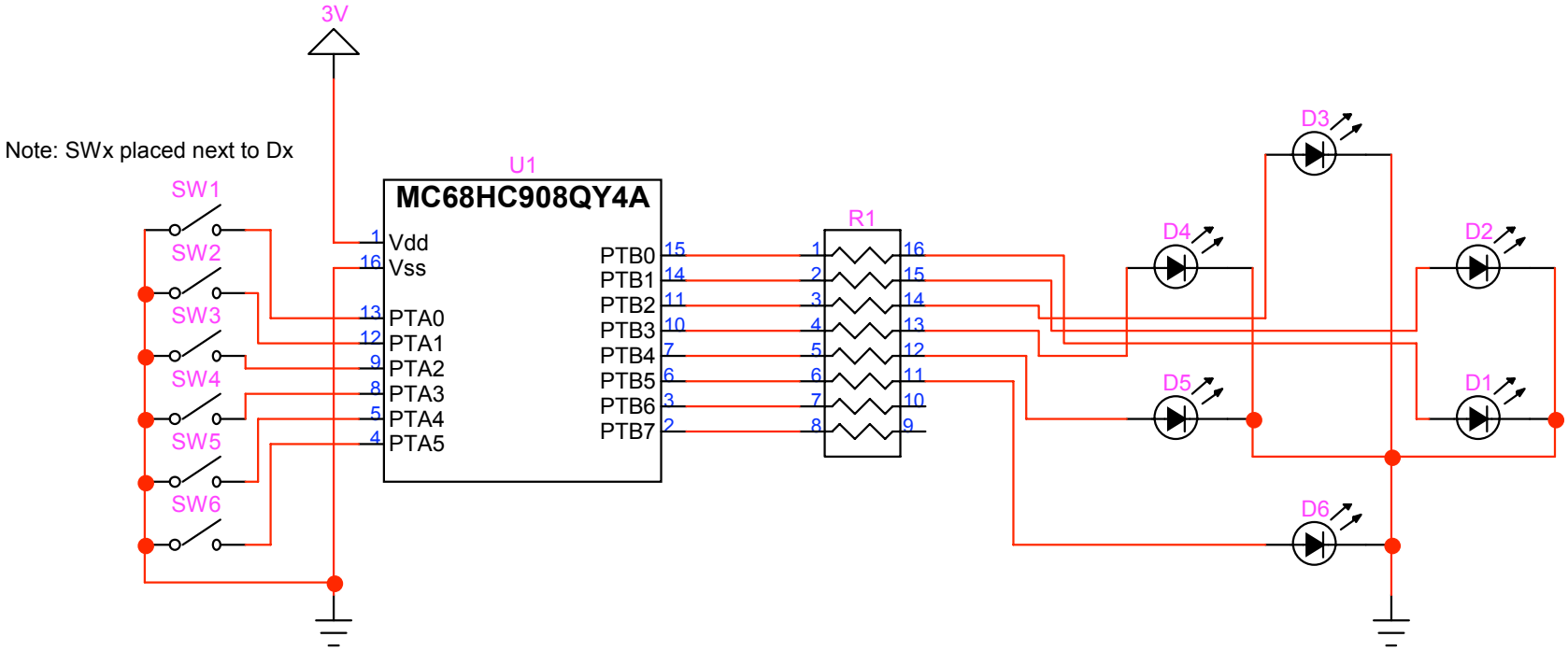

Copyright 2009, William Woody. Reproduction permitted as long as this notice is retained.